# The Railway Herald

www.railwayherald.co.uk

Issue 131 - 16th May 2008
ISSN 1751-8091

# Contents


Wrexham & Shropshire name first Class 67 locomotive **Page 3**

New flyovers in place for East London Line extension **Page 4**

National Network and Light Rail news round-up from the North West **Page 5**

Belgium rail strike causes Eurostar operation to cease for 24 hours **Page 6**

Railtour Listings **Page 9**
Preservation View **Page 19**
Events Diary **Page 24**


## Front Cover

***LNER 'K1' No. 62005 passes Sedgefield on the Norton-on-Tees West Junction to Ferryhill route, mainly used for freight traffic.* Dave Maloney**

## Rear Cover

***LNER 'A4' Pacific No. 60019 Bittern passes through Harbury Cutting on 14th May with the outward run of a 'Cathedrals Express' working from London Victoria to Stratford-upon-Avon.* John Whitehouse**

## Publication

The Railway Herald is due to be published every Friday and is available on e-mail subscription or from our website at www.railwayherald.co.uk

## Submissions

We welcome submissions from all readers, especially digital photographs. Pictures should be sent to the editor at editor@railwayherald.co.uk

Good quality scans of colour slides and prints are also acceptable. Currently there is no financial payment made for photographs published in *Railway Herald*. Where possible we always try to use news photographs taken within the production week of the publication date.

## Website

Our website contains all the back issues of the magazine together with a host of new features which will be online soon!

**www.railwayherald.co.uk**

## National Rail Timetable

The entire UK National Rail Timetable is now available as a PDF download from the Network Rail website.

Produced in the same fashion as the printed version and ordered by table number, the current timetable is available by clicking here.

The railway by-laws and information for enthusiasts are also available online from the Network Rail website, by clicking here.

# Newsdesk

**LATE NEWS ■ LATE NEWS ■ LATE NEWS ■ LATE NEWS ■ LATE NEWS ■ LATE NEWS ■ LATE ■ LAT**

## *Rood Ashton Hall* returns to the rails after boiler certificate receives a short extension

▼ ***Vintage Trains has confirmed that No. 4965* Rood Ashton Hall *has been granted an extension to its boiler certificate and an application for the locomotive to operate on the mainline for 'further months' has been approved. This means that the locomotive will be available for Vintage Trains' season of 'Shakespeare Expresses' that commence on 6th July and will operate each Sunday until 14th September. With the ink on the authorisation to resume mainline activities just about dry, No. 4965 rushes through Slindon, north of Stafford, as a late substitution for the rostered No. 4953* Pitchford Hall *on Vintage Trains 'Welsh Highland Express' on 17th May.* John Whitehouse**

## Network Rail Operations Manager pushed down railway embankment

**British Transport Police are appealing to members of the public for assistance in tracking down two men wanted for questioning after a member of rail staff was threatened with a knife and pushed down a railway embankment in East Sussex.**

BTP Detective Constable Leigh Marshall said "the incident occurred on Tuesday, 13th May on a railway bridge near Ore station. The driver of a train travelling from Ashford to Hastings was coming through Ore station at around 21.10 when he reported an obstruction at the entrance to Ore tunnel. The driver believed he had struck stones and pieces of wood on the line. A Network Rail operations manager attended the scene some 10 minutes later to investigate. He noticed a hole had been cut in the perimeter fence and was confronted by two males. The staff member was threatened with a knife and pushed off the top of the tunnel falling 10ft down the embankment. His fall was only broken by trees leading down to the railway line. The total drop from the top of the tunnel was 50ft and he was very lucky not to have been more seriously injured. "

DC Marshall said the two men fled the scene, which is in a remote area off Rock Lane in Ore village, and the BTP are eager to track them down. The first male, who was carrying the knife, is described as a white male, about 21-years-old, 5ft 7in tall with dark hair and wearing a dark hooded top and dark blue jeans. The second male was also white, about 17-years-old, 6ft tall, with short dark spiked hair. He was wearing a blue zip-up hooded top, with nothing underneath, and matching jogging bottoms.

The incident occurred in a popular walking route for locals and it is believed that someone may hold information which could prove vital in the police investigation. Anyone who saw these two individuals in the area before or after 21.00 on the day is urged to contact British Transport Police on 0800 40 50 40 or the Witness Appeal Line on 0207 391 5275 quoting background log B5 of 15/5.


**Editorial Team:**

| | | |
|---|---|---|
| Richard Tuplin | Editor | editor@railwayherald.co.uk |
| Brian Morrison | Contributing Editor | brian.morrison@railwayherald.co.uk |
| John Whitehouse | Railtour Editor | john.whitehouse@railwayherald.co.uk |

**Editorial Address:**

The Railway Herald, PO Box 252, Scunthorpe, North Lincolnshire. United Kingdom. DN17 2WY

**Telephone:** 0844 870 0735 **E-mail:** editor@railwayherald.co.uk

Railway Herald is produced by Railway Herald Ltd (Registered as company number 05837609 in England)

*Registered office: Hobarn House, 12 Brompton Road, Northallerton, North Yorkshire, DL6 1DY*



**© Copyright Railway Herald Ltd 2006-2008**

# Wrexham & Shropshire name Class 67

**The Wrexham, Shropshire and Marylebone Railway (WSMR) has paid tribute to David J. Lloyd, a prominent figure in Shropshire's rail history and founder of the Shrewsbury Chester Rail Partnership, by naming Class 67 No. 67015 after him in a special ceremony at Gobowen station as part of the local community rail day celebrations.**

The WSMR has also introduced a competition across Wrexham, Shropshire and Telford, giving schools along the line a chance to name the remaining three locomotives. Winners will be contacted shortly and will attend special naming ceremonies before taking their tickets to board one of the company's trains to London.

▲ *Class 67 No. 67015 is named* **David J. Lloyd** *by Mr Lloyd's daughter Ceinwen Lloyd at Gobowen on 16th May, as part of the Community Rail Weekend.* **Wrexham & Shropshire**

# Fastline Freight begins coal operations

▼ *With the company's own Class 66 fleet not expected to arrive until mid-summer, Fastline have hired a First GBRf Class 66 as an interim measure. With a rake of Fastline Freight branded HXA coal hoppers in tow, First GBRf/ Metronet-liveried Class 66/7 No. 66719* **Metro-Land** *passes Water Orton on 14th May.* **David Pagett**

# King's Cross redevelopment moves forward as preferred bidder is announced

**The preferred bidder for Stage 1 of the western concourse works contract for the £400 million redevelopment of King's Cross station has been announced by Network Rail as Taylor Woodrow.**

An announcement on the award of the full contract of the works will be made in the next few months. The western concourse works is the biggest of the redevelopment, however, and will bring about major improvements to the London terminus.

The new semi-circular structure to the west of the station will house a spacious 8,000sq metre concourse - three times the size of the existing one - and will include the installation of voltaic roof panels that enable the building to be self heating and much brighter than is currently the case.

An additional platform, increasing reliability and capacity at the station is also to be built, and the Grade 1 listed façade will be restored to its former glory by demolishing the current single-storey extension to the station.

A new open piazza in front of the station, larger than Leicester Square, will be created. The majority of the station redevelopment will be completed by 2012 in time for the Olympics, with the transformation complete by 2013.

## Flyovers in place for East London Line

**The last of three new flyovers for Transport for London's East London Line (ELL) extension has been installed just north of New Cross Gate station.**

The 600 tonne, 75 metre truss steel structure will carry the line across the London to Brighton main line and will take the northbound service off the Network Rail tracks into London Bridge and then back onto the existing ELL alignment, and towards Surrey Quays station.

The first of the new bridges was lowered into place over Shoreditch High Street on 29th March and the second was installed at Liverpool Street over the first May Bank Holiday.

▶ ***The last of the new flyovers for the East London Line is manoeuvred into position on 10th May, just north of New Cross Gate station.*** **Transport for London**

## New ticketing and security measures

**London Midland is introducing a range of new ticketing, security and environmental measures at its station car parks throughout its network, which stretches from London to Liverpool.**

The new measures, part of a £5.7 million package of investments, include, from 5 May, a scratch card payment system to make buying tickets faster and cheaper alongwith half price season tickets for low emission cars and free parking for electric cars. Pay and display machines will replace barriers at Berkhamsted, Hemel Hempstead, Bletchley, Tring, and Leighton Buzzard, and there is to be a trial of 'pay by mobile phone' at Watford Junction and Berkhamsted car parks. Parking scratch cards will mean 10% off daily costs at many locations. The mobile phone trial will run until December and there are plans to extend the scheme to all its car parks. A £170,000 renovation of St Albans Abbey station is also underway, the first of a series of station projects for London Midland.

## Heathrow's very own dot2dot!

**National Express has introduced a new, direct executive coach service linking London King's Cross station directly with all five terminals at Heathrow.**

With frequent services running 24 hours a day, the National Express Dot2Dot service offers a quick, simple and inexpensive way of getting to the airport.

Tickets for the service normally start from £17.50 one way, based on a return trip, around half the cost of a taxi. And for passengers who pre-book journeys before the end of May for travel until the end of October, the price drops to £14 one way, thanks to the 20% discount offer.

National Express East Coast sales and marketing director Rachel Dawson said: "This new service is simple and convenient. As soon as you pre-book your ticket, Dot2Dot will be aware of your train arrival time and the shuttle coach will be waiting for you at a dedicated pick-up point adjacent to King's Cross station.

## SouthEastern Class 508 on driver-training for Javelin tests

▼ ***On 14th, 15th and 16th May, one of the SouthEastern Class 508 EMUs, normally stabled during the day at Tonbridge Sidings, was utilised for driver route learning duties in Kent, in connection with forthcoming test runs with Javelin stock. On 15th May, Class 508 No. 508208 approaches Sole Street station on the 09.15 Tonbridge-Tonbridge route learner.*** **William Turvill**

## Oyster on First Great Western from September

**Passengers on some suburban lines around London travelling on First Great Western (FGW) trains will be able to use pay-as-you-go Oyster cards from September.**

Announcing the deal, Mayor Boris Johnson said he would discuss introducing the card on other routes around the capital with the other train operators by the summer. The FGW stations affected are Acton Main Line, Castle Bar Park, Drayton Green, Hanwell, Hayes & Harlington, South Greenford, Southall, West Drayton and West Ealing.

Transport for London is investing £40 million in new Oyster equipment and will be working with the train operating companies to agree their deals and open up Oyster for everyone.

With 17 million cards issued since its introduction, the card has been a great success in speeding up journeys and cutting down queues on the Tube and buses.

▲ *Arriva Trains Wales Class 175/1 No. 175 111 is pictured at Earlestown's singled west curve on 10th May, having arrived as a North Wales service from Llandudno.* **Eddie Bellass**

## Engineering work results in terminations at Earlestown

**Engineering work on the Chat Moss line on 10th May resulted in Arriva Trains Wales (ATW) services between North Wales and Manchester Piccadilly terminating at Earlestown.**

The services used the now single line, bi-directional Platform 3 on the west curve of the triangle, normally used only by Northern's Liverpool Lime Street to Warrington and Ellesmere Port trains, rather than the usual Platforms 4 and 5, which nowadays are exclusively served by ATW.

This course of action allowed the timetable to stay the same, with the usual arrival and departure times from Earlestown and provide a 17-minute turnaround.

## All change for Manchester Airport freight branch

▼ *Track removal work has begun on the short 2km spur built alongside Manchester Airport in 1997 to allow rail-borne delivery of stone for use in the construction of the second runway. It is disappointing to see the track being lifted as there had been suggestions it could be used for further deliveries of stone when construction of the planned new freight terminal at the airport begins. On 11th May, a road-rail excavator is seen working at the site.* **Jonathan Stevenson**

## Works starts on reinstating Olive Mount Chord

**A 13-metre Kirow crane, one of only five in GB with a huge lifting capacity of up to 1,200 metric tonnes, laid the new tracks on the £7.6 million Olive Mount Chord project over the Bank Holiday weekend.**

The chord is a key freight link between the Port of Liverpool and the West Coast Main Line that will also remove the need for freight trains to reverse at Edge Hill, cutting rail times by avoiding the need to cross lines into and out of Lime Street.

The Olive Mount Chord scheme involves re-opening the disused quarter-mile stretch of line that links Bootle with London and Manchester, which has been closed for some 20 years.

Merseytravel is contributing £5.6 million to the project, which is also being supported by Network Rail, the Northwest Regional Development Agency, district councils and the European Regional Development Fund.

## £244 million funding for Metrolink extensions

**Transport Secretary Ruth Kelly announced on 16th May that people living and commuting in Greater Manchester will soon benefit from extensions to the popular Metrolink tram after the Government pledged to provide £244 million towards the £382 million total cost of the scheme.**

By 2012, residents and commuters will be able to use the Metrolink to travel as far as Oldham, Rochdale or Chorlton. Work will also include upgrades such as rejuvenating disused rail routes for the trams to run on. This will in turn contribute to faster journey times and more frequent services.

Greater Manchester Passenger Transport Executive (GMPTE) is also constructing a further extension to the Metrolink network, separately funded, to Droylsden in the east of the city.

The extension to Oldham and Rochdale, which is planned to open in 2012, will be around 23 km long and will include a conversion of Oldham's existing Loop rail line to Metrolink operation, allowing direct access to Manchester City Centre.

The section to Chorlton will be 4 kilometres long and is expected to open in 2011, making use of the disused railway line between Trafford Bar and Chorlton.

❖ Scottish campaigners have estimated that it will cost £20 million to reopen the 'mothballed' line between Leven and Thornton, and provide a service to Edinburgh, and are hoping to convince the transport minister of its merits. Tracks and signals are still in place from when the line carried freight to Methil Docks, although they have not been sufficiently maintained. Some of the campaigners also want to see the branch line from Leuchars to St Andrews reinstated to ease traffic congestion. St Andrews has no railway and tourist traffic, particularly around bank holidays, often causes major congestion on the A91 road.

❖ Mark Hopwood, the performance director of First Great Western, told the annual meeting of the Cotswold Line Promotion Group, that he was looking at ways to reduce empty train movements to and from the company's depots in London and Bristol, and facilities at FGW's Oxford carriage sidings may be upgraded to help improve reliability of services, particularly on the Cotswold Line to Worcester.

❖ Tube Lines has completed the upgrade of three further stations, Dollis Hill, Highgate and Southgate, taking the total number of stations revamped so far to 55, this total being well over half way through the £500 million station upgrade programme across the Jubilee, Northern and Piccadilly lines. All three stations were in clear need of an upgrade, and now they are complete there is more information available about when the next trains will arrive and where they are going, and announcements will be clearer. There are also additional CCTV cameras and new Help Points and new wall tiles give a more pleasant appearance to platforms.

❖ Recent brake testing for faster trains on London Underground's Jubilee Line used over 90 tonnes of weights to simulate a fully loaded train and to test brake performance. Tube Lines has conducted a series of tests to help progress towards the line upgrade. The train's emergency brakes were applied at intervals along the line, including at the steepest slopes near Bermondsey and west of Canning Town, where the track dives underground and passes under the River Thames. Measurements of stopping distances will be compared with standard industry figures for braking. Temperature sensors embedded in the brake blocks will enable sophisticated computer modelling to aid system designs.

# First GBRf launch new 'request stop' freight

**First GBRf has announced the start of a new contract with Praxis Engineering, which provides a unique 'request stop' service for train owners looking to transport wagons in and around Long Marston.**

Working with Praxis and Motorail Logistics, First GBRf is providing two train services per week to transport vehicles from Leeds to Praxis Engineering's workshop in Long Marston. Named 'The Praxis Express', the services will run on Tuesdays and Fridays for at least a three-month period and will be open to other stock or locomotive owners who wish to move vehicles into and out of storage. With prior notification 'The Praxis Express' can be diverted off route to deliver or pick up vehicles, which need to be tested or stored before onward travel.

# £4 million project to renew 109-year old viaduct

**An extensive £4 million project to renew the 109-years-old Weston Mill viaduct, which stretches across a wide tidal inlet next to the Devonport Naval Dockyard, has started.**

Network Rail is spending a total of nine months improving the condition of the viaduct, which is also known as the 'Shaky Bridge'. The renewal project is the largest engineering work carried out on the viaduct since the 1980s. Repairs will be made to the steelwork and brickwork to strengthen its structure and extend its life for another 50 years. The bridge over the viaduct will also be repainted to protect it from corrosion caused by the salty air. At 46 feet high and 1,200 feet long, the Weston Mill viaduct was a replacement for an all-timber structure that was originally designed by Brunel. It carries the main line across Camels Head Creek between Keyham and Saint Budeaux stations. Train services on this route will not be affected by the engineering work.

# Riveria Class 47 on driver-training duties

▲ *Riviera Trains Class 47/4 No. 47843* **Vulcan** *has recently been engaged on route-learning duties between Westbury and Weymouth, in preparation for the summer timetabled loco-hauled workings. The Class 47 is pictured leaving Yeovil Pen Mill past the newly installed upper quadrant signals on 12th May.* **Michael Burnett**

# Belgium strike stops Eurostar operation

**Due to proposed industrial action in Belgium, Eurostar may be unable to operate any services between the UK and Brussels on Tuesday 20th May, with one exception.**

A 24-hour strike by Belgian railway workers is planned to commence at 22.00 (CET) on 19th May. If the planned action does take place, Eurostar expects that Brussels Midi station and the rest of the Belgian rail network will be closed. This means there would be no rail services operating between Lille and Brussels Midi. There would also be no high-speed onward rail connections on Thalys or ICE from Brussels to destinations in France, the Netherlands and Germany. The company is therefore advising all travellers to and from Belgium on 20th May that they should change their travel plans and to exchange their tickets for alternative dates or obtain refunds by contacting their original point of sale. For more information contact the Ashford Contact Centre on 08705 186 186.

On 19th May, the 19.34 departure (train 9158) from St Pancras International to Brussels would terminate at Lille. On 20th May, only the 19.34 service from London would be expected to operate through to Brussels, on the assumption that the Belgian high-speed line would re-open at 22.00 (CET). The availability of tickets on this train is limited.

Eurostar services between St Pancras International, Ebbsfleet International, Ashford International and Paris would operate normally and may make additional stops at Lille. For travellers between the UK and Lille, some scheduled services would be cancelled while other alternative services would be provided. Passengers are advised to check in as normal. Full services are expected to resume immediately after the proposed industrial action has ended. Eurostar will issue a further release/s as soon as any more information about the situation is available.



**Please mention** *Railway Herald*, **when responding to advertisers**

▲ *Class 55 'Deltic' No. 55022* **Royal Scots Grey** *crosses the River Forth, just north of Stirling, on the Alloa Branch on 15th May, hauling the 16.30 line re-opening special from Stirling to Alloa. This was one of three such return trips during the day.* **Ken Brunt**

# Stirling-Alloa-Kincardine line officially opens to traffic

**After a period of over 40 years, public services recommenced from the brand new Alloa station on 15th May.**

Although National Network services are not scheduled to commence until 19th May, the three special charter services which operated from Alloa to Stirling and return carried hundreds of people during the day.

Transport Minister Stewart Stevenson joined local people to celebrate the culmination of eight years work to re-establish the rail line. It is the first time a passenger train has been seen at Alloa station since it closed in 1968.

Mr Stevenson said: "This is one of the most important infrastructure projects Scotland has seen in decades, and the significance of this project extends beyond Stirling, Alloa and Kincardine. The whole of Scotland is set to benefit".

The work to restore the railway commenced in earnest in 2004, when the first private rail bill to be approved by the Scottish Parliament was passed.

The route itself covers a 13 mile (21km) section from Stirling through to Alloa, where a single platform station has been provided. For freight services to Longannet Power Station and Fife, the route continues past the site of the old Kincardine Power Station to join up with the existing branch from Dunfermline to Longannet and Kincardine. This will allow freight operators, initially EWS, to make use of the newer bogie hopper HTA wagons, rather than the older two-axle HAA hoppers that have been used for many years. The restriction of the Forth Bridge has prevented HTAs being used before.

The removal of Longannet-bound coal trains from the Forth Bridge route will release additional capacity for other freight and local passenger services.

During the opening day, two special trains were planned to be operated by SRPS Railtours, using John Cameron's LNER 'K4' 2-6-0 No. 61994 *The Great Marquess* and 'Deltic' No. 55022 *Royal Scots Grey*, in 'top and tail' formation. However, popularity of the trips was such that a third train was added.

With passenger services due to commence on 19th May, the reopening is an important part of Transport Scotland's programme of investment in major rail infrastructure, creating high quality public transport links across Scotland. The new station allows direct hourly passenger services between Alloa, Stirling and Glasgow Queen Street and onward services from Stirling to Edinburgh. The first arrival at Alloa on weekdays is the 06.13 from Glasgow Queen Street, due at 07.06, forming the first departure at 07.10 to Glasgow. The last weekday arrival is at 23.13, with the final departure being at 22.41 again, direct to Glasgow.

▶ ***To coincide with the official re-opening of the Stirling-Alloa line, the Scottish Railway Preservation Society ran three public trips along the route using LNER 'K1' No. 61994*** **The Great Marquess** ***and 'Deltic' No. 55022*** **Royal Scots Grey** ***in a top and tail formation. No. 61994 stands at Alloa at the head of the 15.30 Alloa to Stirling service.*** **John Anderson**

❖ Highlands and Islands Enterprise (HIE) appears set to take over the running of the Cairngorm funicular railway in order to keep the facility open in face of severe financial problems faced by its operator, CairnGorm Mountain Ltd. This situation follows numerous poor seasons on the ski slopes, now alleviated to some extent after six months of snow this year, which resulted in people skiing into May for the first time in years. The position is due to be discussed by the Highland Council. The HIE itself met £16.9 million of the £19.6 million cost of the funicular.

❖ Following the official opening of Network Rail's East Midlands Control Centre (EMCC) in Derby last month, East Midlands Trains has moved a number of key staff to the new shared facility. Controllers from both companies now sit side-by-side, sharing information and being able to work quickly together to manage day-to-day operations. The EMCC building is the first of its kind in the UK. It has been built to a modular design, enabling Network Rail to provide modern facilities at an efficient cost and is the first of a number of similar control centres planned around the country. It is Network Rail's 'greenest' ever building, incorporating solar water heating to reduce carbon emissions and rainwater harvesting to save a million litres of water every year.

❖ Chiltern Railways has paid tribute to the late Councillor John Cripps by unveiling a plaque to him at Northolt Park station. Cllr Cripps played a vital role in keeping the Marylebone–High Wycombe line open in the 1980s when it was threatened with closure, and Chiltern Railways, which now operate two trains per hour to Marylebone and two trains an hour northbound from the station, wanted to pay their respects to a man who did so much to keep the trains running. The unveiling took place on 13th May in the presence of Cllr Cripps' widow, Cllr John Nickolay, Mayor of Harrow, and Paul Robb, General Manager South of Chiltern Railways.

❖ National Express East Coast is to operate an extra non-stop train to London to take Hull City football fans to the Championship play-off final on Saturday, 24th May. The extra train will leave Hull at 08.47 on the day and will run non-stop to London King's Cross, arriving at 11.44. The return service departs King's Cross at 19.10 and will arrive back in Hull at 22.02.

▲ *Class 66/0 No. 66119 heads south over the River Avon at Eckington with empty coil carriers from Corby to Margam on 12th May.* **David Pagett**

# Arup propose new 'Heathrow Hub' for GWML

**Arup, the global firm of designers, engineers and business consultants, has released its proposals outlining how to improve access and add more space for passengers at Heathrow airport after three years of research.**

The proposals would see Heathrow become the first stop on an extended high-speed rail network that currently terminates at King's Cross St Pancras. This would provide the airport with a direct rail link to continental Europe. Creating a new high-speed rail station at Heathrow - also serving national rail train services on the Great Western mainline - would make the airport instantly more accessible to the West, South West, Wales and the Midlands.

Cities such as Oxford, Birmingham and Cardiff would have new direct services to Heathrow, making it a much more attractive proposition to arrive at the airport by rail, a more environmentally-friendly mode of transport than the road access that currently predominates.

Currently, just 22% of passengers arrive at Heathrow by rail, including the London Underground, in direct contrast to the 65% that arrive by car.

Arup say that its plans fit in with emerging proposals to extend high-speed rail lines north, and that looking to the future, we could see travel times from Heathrow to Leeds and Manchester by rail reduced to less than two hours.

Arup has researched over 22 potential sites for the new terminal and has pinpointed an area approximately three kilometres north of the existing T5 that would have maximum impact for rail connectivity but would also have minimal impact on Heathrow's existing infrastructure.

Before announcing the plans, Arup have had discussions with BAA, the airlines and the rail industry, together with local councils and government representatives and all parties can see the significant value that would be delivered to passengers and local residents by improving rail connectivity to the airport.

▶ ***Arup's plans would see the 'hub' linked to the five Heathrow terminals, as well as to the T5 station for linking with Heathrow Express, London Underground Crossrail and Airtrack.***

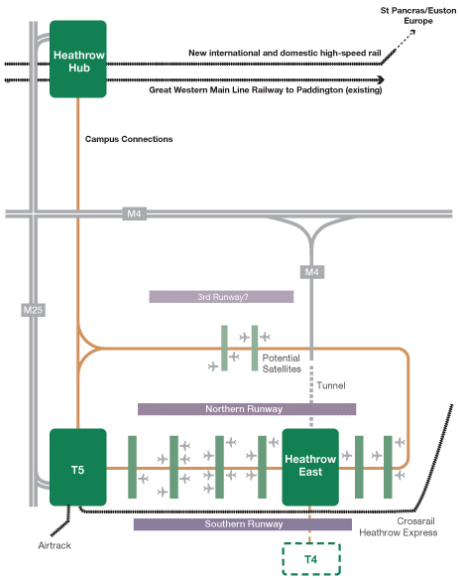


▼ ***A key 'hub' station, situated to the west of West Drayton, is envisaged, which will allow connections from the Great Western Main Line, local services, an extended HS1 from St Pancras and potentially linking with a UK high-speed network from the north-east and north-west.*** **Arup**

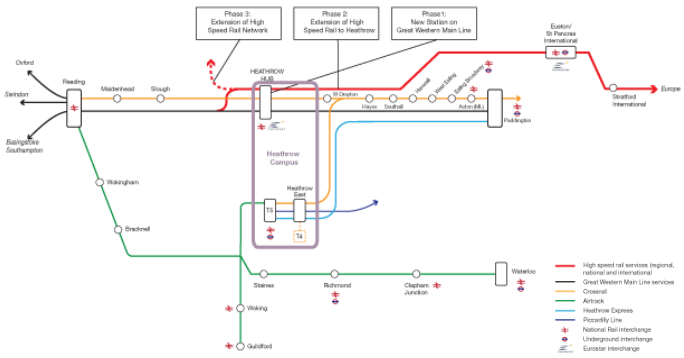




**Please mention** *Railway Herald*, **when responding to advertisers**

▲ *Sporting its newly acquired First Capital Connect branding, Class 319/4 No. 319451 heads south near Tring, on the WCML, with a 09.25 Wolverton to Bedford Cauldwell ECS movement on 13th May.* **Don Gatehouse**

# New travel centre for Aberdeen

**A new travel centre at Aberdeen station opens its doors on 18th May, marking the latest stage of the major station redevelopment programme.**

Located in the new, purpose built North block, the lighter, brighter and more modern facility has eight ticket desks, each fitted with hearing loops, a lowered ticket counter for people using wheelchairs and new Customer Information Screens providing the latest travel information,

In addition, an audio, call forward, queuing system alerts people to the next available ticket desk and an additional Ticket Vending Machine (TVM), complementing the two already installed on the main concourse, will allow make easy ticket purchases for same day travel.

This latest development to the station follows the installation of passenger lifts, improved signage and provision of new arrival and departure boards on the concourse, which have previously been reported.

# FGW amends HST operations at rural stations

**First Great Western is introducing changes to the way it stops High Speed Trains at rural and local stations from 18th May.**

The changes reflect feedback from passengers and operational experience gained since HSTs began stopping at stations with short platforms in December 2007 to provide increased capacity across the South West and Cotswolds routes. Using a Selective Door Opening (SDO) system, train managers have been able open train doors that are at the platform, but leave those doors that are off the platform, locked for safety. Now more Standard Class carriage doors will be able to open on short platforms, and loading and unloading bikes will be more consistent because Coach A, the guards van, will now be available through revised stopping on short platforms.

For trains travelling west, away from London, there will be no change when the train is in a normal formation with First Class accommodation at the rear. However, if the train is 'in reverse' coach order, it will move through the short station to a designated point to ensure the rear of the train is on the platform, including Coach A.

All trains travelling east will have the front of the train move beyond a short station to ensure the rear of the train is on the platform, including the guards van at Coach A.

If, for operational reasons, a train is unable to adopt the new system, it will stop with its front positioned on the platform. In these circumstances passengers will be permitted to place bicycles in the door vestibule areas if the guards van is not accessible at nominated stations, until they can be transferred. Posters with details of these changes will be displayed at stations, and signs indicating cycle loading points will also be provided.


NEW ZEALAND
GREAT STEAM PHOTO TOUR

12 - 31 October 2008
*19 days of fabulous photo opportunities!*

Starting and finishing in Auckland, we take in some of New Zealand's most stunning scenery on a tour packed with fascinating visits to private steam lines and museums.

The tour includes a journey on the famous **Kingston Flyer** and a four-day stay in Palmerston North to enjoy steam excursions and other events marking the **North Island Main Trunk Centenary Celebrations.**

*The holiday of a lifetime for the rail enthusiast!*

During many miles of shadowing steam trains along coastal railways and across gorges, with numerous photo opportunities, we visit such places as Queenstown, Dunedin, Christchurch, Wellington, Masterton, Ormondville, Gisborne, Wanganui and Hamilton.

FULL ITINERARY AND FURTHER DETAILS ON OUR WEBSITE

**EERailtours**
**Birchwood, Shatterford, Nr Bewdley, Worcs. DY12 1TP**
**E-mail: enquiries@eerailtours.eu**
**Tel: +44(0)1299 861529 Fax: +44(0)1299 861058**
**www.eerailtours.eu**



YOUR BUSINESS COULD BE HERE

**With fast, efficient service and cost-effective prices with our 'flat-rate' policy, this space could be yours.**

Whether your business is aimed at the enthusiast or the professional, be it books and DVDs or special day trips and gala events, advertising with *Railway Herald* is competitive and responsive.

Contact *Railway Herald's* Advertising Manager now and discuss how we can help your business succeed.

**advertising@railwayherald.co.uk or call 0844 870 0835**



The Railway Herald WORLDWIDE

All the news and some of the best railway photography from around the world each month.

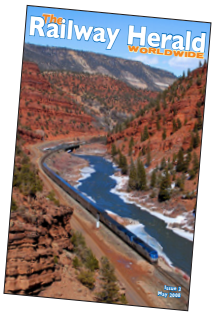


**Issue 3 includes:**
American Railroading: The Cajon Pass
A beginners guide to the railways of Germany
A pictorial look at the German Rhine Valley.

**Visit www.railwayherald.com/worldwide for more details**

**Issue 3 available now**

## UK Steam & Modern Traction Railtour Listings

The following table details the latest information available on steam, diesel and electric railtours for the forthcoming weeks from the date of publication. Information is understood to be correct at the time of going to press.

| | | |
|---|---|---|
| **16th May** | | |
| Railtourer | 2xWCRC 47 | **West Highland Weekend: Day 1**: Peterborough-Doncaster-Wakefield-Leeds-York AND Scarborough-Seamer-Malton-York (train combines) Newcastle upon Tyne-Edinburgh-Glasgow-Fort William |
| Royal Scotsman | 2xWCRC 47 | **Classic Tour-Day 5:** Dundee- North Queensferry-Edinburgh |
| **17th May** | | |
| Compass Tours | 2xRiveria 47 | Preston-Bolton-Stockport-Torquay-Paignton (break/rev) and return |
| Kingfisher Railtours | 2xEWS 37 | Bedford-Buxton (break/rev) and return **Cancelled** |
| NYMR | NYMR Pool | Pickering - Whitby and return (three trips) |
| Past Time Rail | 2xEWS 67 | Lichfield City-Birmingham New St-Kidderminster-Worcester Shrub Hill-Cheltenham Spa-Bristol TM- Par & return |
| Pathfinder Tours | 2xWCRC 33 | Crewe-Westbury-Yeovil-Weymouth (break/rev)-Bournemouth-Southampton-Oxford-Evesham-Worcester Shrub Hill and return |
| Railtourer | 62005 | **West Highland Weekend: Day 2:** Ft William-Mallaig & rtn |
| Railway Touring Company | 71000 | Birmingham International-Plymouth and return **Cancelled** |
| Vintage Trains | 4953 | Tyseley Warwick Road-Stafford--Chester-Llandudno Junction & rtn |
| **18th May** | | |
| Past Time Rail | 45407 | **The Cotton Mill Express:** Manchester Victoria-Diggle-Huddersfield-Copy Pit-Blackburn (break)-Darwen-Bolton-Manchester Victoria |
| Railtourer | 2xWCRC 47 | **West Highland Weekend: Day 3:** Fort William- Glasgow-Edinburgh-York and return as outwards on Day 1) |
| SRPS | 61994 | Edinburgh Waverley-Craigentinny-Edinburgh Haymarket-Forth Bridge-Thornton South & West Jcts-Cowdenbeath-North Queensferry-Edinburgh Waverley (Morning Trip) |
| SRPS | 61994 | Edinburgh Waverley-Craigentinny-Edinburgh Haymarket-Forth Bridge-Thornton South & West Jcts-Cowdenbeath-North Queensferry-Edinburgh Waverley (Afternoon Trip) |
| **21st May** | | |
| Royal Scotsman | 2xWCRC 47s | **Classic Tour-Day 1:** Edinburgh-Dundee-Aberdeen-Keith |
| **22nd May** | | |
| Royal Scotsman | 2xWCRC 47s | **Classic Tour-Day 2:** Keith-Tain (rev)-Dingwall-Kyle of Lochalsh |
| **23rd May** | | |
| Royal Scotsman | 2xWCRC 47s | **Classic Tour-Day 3:** Kyle of Lochalsh-Aviemore-Boat of Garten |
| **24th May** | | |
| 5305 Loco Association | 70013 | Tyseley-York (and return) **Postponed** |
| Kingfisher Railtours | 71000 | (Ealing Broadway-)Taunton-Kingswear **Postponed** |
| NENTA Traintours | 2xCR Cl47 | Norwich-Peterborough-Newcastle upon Tyne and return |
| Past Time Rail | 2xEWS 37s | London KX-Doncaster-S&C-Carlisle-Hexham-York-London KX |
| Past Time Rail | tbc | Shrewsbury-Hereford-Abergavenny-Bristol TM- Par & return |
| Pathfinder Tours | 6201 | (Birmingham)-Preston-S&C-Carlisle **Cancelled** |
| PMR Tours | 6233 | (Gloucester-)Crewe-Shap-Carlisle-Crewe (and return) |
| Railtourer | 48151 | (Hull-Knottingley-)-Hellifield-Appleby-Carlisle (and return) |
| Railway Touring Company | 60009 | (Huddersfield-)York-Edinburgh Waverley (and return) |
| Royal Scotsman | 2xWCRC 47s | **Classic Tour-Day 4:** Boat of Garten-Dunkeld-Perth-Dundee |
| SRPS | 55022 | North Berwick-Falkirk High- Fort William-Mallaig and return |
| UK Railtours | tbc | London KX-Potters Bar-Stevenage-York and return |
| UK Railtours | 2xEWS 67s | London KX- York (break)-Gainsborough-Newark-& return |
| Vintage Trains | 5029 | Tyseley Warwick Road- Chesterfield-Pontefract-York and return |
| **25th May** | | |
| Railway Touring Company | 60019 & 71000 | London Waterloo-Exeter SD and return **Cancelled** |
| Royal Scotsman | 2xWCRC 47s | **Classic Tour-Day 5:** Dundee-Edinburgh Waverley |
| **26th May** | | |
| Heartland Rail | 2xCR Cl47 | Gloucester-Southend and return **Cancelled** |
| Kingfisher Railtours | tbc | Carnforth-Grange over Sands-Ravenglass and return |
| Mark Elderkin | D1015 | London Paddington-Weymouth and return **Cancelled** |
| Pathfinder Tours | 2xEWS 37s | Swindon-Kemble-Welshpool-Portmadog-Pwllheli and return |
| Royal Scotsman | 2xWCRC 47s | **Classic Tour-Day 1:** Edinburgh-Montrose-Aberdeen-Keith |
| Vintage Trains | 2xClass 47 | Tyseley Warwick Road-Burton-Leicester-Barking-Southend Central |
| WCRC | 34067 | York-Knaresborough-Harrogate-Leeds-York Scarborough and return |

### Regular Scheduled Steam Operations

Services detailed below, do not appear in the main listings above, being regular itinery operations.

| Dates | Operator | Train | Route | Loco Pool |
|---|---|---|---|---|
| 19-23 May | WCRC | Jacobite | Fort William-Mallaig and return | TBC |
| 20-22 May | NYMR | Whitby | Pickering-Whitby and return (three trips) | NYMR Pool |
| 24 May | NYMR | Whitby | Pickering-Whitby and return (three trips) | NYMR Pool |

**Key to tour listings:**

**BLACK** Charters expected to operate as booked.
**GREEN** Tours postponed to a future date by the operator
**WCRC** West Coast Railway Company
**RED** Tours cancelled by the operator
**BLUE** Provisional excursion
(Locations) in brackets on a steam tour listing indicates a diesel or electric-hauled section.

**Not all pick up/set down points are shown. Check with the operator before travelling any distance.**

## The Week Ahead

**The commencement of West Coast's 'Jacobite' season is always a timely reminder that summer is just around the corner.**

Trains commence on 19th May and run Monday to Fridays until 10th October, with an enhanced daily operation between 28th June and 31st August. The locomotive pool this year will commence with Nos. 62005 and 45407, with No. 45231 replacing No. 45407 in a few weeks time. Booking, especially in high season, is highly recommended.

The Bank Holiday weekend offers a number of trains, because quite simply they are all over the country! There are no less than four steam workings on 24th May, the highlight of which is always the return of a 'Duchess' to Shap Fell. PMR Tours offer No. 6233 *Duchess of Sutherland* with an 'out and back' from Crewe to Carlisle, WCML all the way, on a tour that originates at Gloucester. Meanwhile, Railtourer also head for Carlisle, with No. 48151 providing the traction from Hellifield on a tour from Hull which returns diesel-hauled from Carlisle, again via the S&C.

York will be an extremely busy place on 24th May, with several tours aimed at the '1968 & all that' event at the National Railway Museum. Vintage Trains operate from Tyseley Warwick Road, and provide a rare spectacle of a 'Castle' at York, with No. 5029 *Nunney Castle* having charge of the train throughout. Railway Touring Company change traction at York with its 'Heart of Midlothian', when the diesel from Huddersfield is replaced by No. 60009 *Union of South Africa* for the onward leg to Edinburgh. The return is diesel-hauled throughout. Also heading for York will be UK Railtours with a charter from London King's Cross, while Nenta Traintours will be setting down at York with its train from Norwich, which continues north to Durham and Newcastle. Additionally, Past Time is also due to put in an appearance, although the company will be changing traction on the return leg of the Settle and Carlisle jaunt, which sets off from King's Cross with a Class 92, changing to a pair of EWS Class 37s at Doncaster to continue to Carlisle via Leeds. The return itinerary is via the Tyne Valley and the ECML to York, where the Class 37s will retire, the train returning south with a Class 92.

Also, the SRPS heads for the West Highlands from North Berwick, with No. 55022 *Royal Scots Grey* booked throughout to Fort William and Mallaig, while in the West of England, Past Time has an 'EdenEx' from Shrewsbury to Par, via the Welsh Marches.

Kingfisher operates a 'Cumbrian Coast Fellsman' on 26th May between Carnforth and Ravenglass, likely to use No. 48151 for traction. The company is also, of course, the booking agents for this years' 'Scarborough Spa Expresses', which are booked to operate during the Bank Holiday week. Battle of Britain Pacific No. 34067 *Tangmere* is the rostered locomotive for the trains on May 26th-29th, which will run from York around the Harrogate Circle back to York and then onward to Scarborough.

Also on 26th May, Pathfinder head to the Cambrian Coast from Swindon with a pair of EWS Class 37s as far as Machynlleth, and then due to weight restrictions on the Barmouth Bridge, with a single Class 37 onward to Barmouth, Porthmadog and Pwllheli.

Stobart Rail offer a pre-Bank Holiday luncheon circular tour on 22nd May from London Victoria via Woking and Andover to Southampton, Fareham, Guildford, Woking and Staines, to arrive back in the capital at Euston. DRS Class 47s should feature.

### Useful Weblinks

- Online railtour listings
- Tour operators contact details
- Current fire-risk status info
- Email the railtours editor

▲ *Gresley 'A4' Pacific No. 60019* **Bittern** *passes Great Bourton on 14th May, with a Stratford-upon-Avon - London Victoria 'Cathedrals Express' charter.* **Derek Elston**

▼ *DRS Class 47/7 No. 47712* **Pride of Carlisle** *heads along the sea wall at St. Ishmael with the 16.14 Carmarthen to London Paddington on 15th May.* **Phil Trotter**

▼ *On 15th May, Battle of Britain Pacific No. 34067 passes the box at Lichfield Trent Valley, which is due to close at the end of the month, while working northwards to Carnforth.* **John Whitehouse**

# Enforced changes for 1948 Loco Exchanges charter special

**There has been frantic activity between Steam Dreams and Network Rail to re-route Steam Dreams' special celebrating the 60th anniversary of the 1948 Locomotive Exchanges.**

The problem has been caused by trackwork west of Salisbury causing some structures to become out of gauge for the 'big' engines, such as No. 6233 *Duchess of Sutherland* and No. 60019 *Bittern*, both of which are engaged in the 1st June run between London Waterloo and Exeter.

With The Railway Touring Company's 'Atlantic Coast Express' scheduled for 25th May already cancelled for the same reason, Steam Dream's has secured a very credible alternative arrangement. On the outward run, the train will be steam-hauled by No. 6233 from Waterloo to Yeovil Junction, where a diesel will be attached to power the train to Castle Cary, where *Duchess of Sutherland* will again take over for the run to Exeter, but now over Whiteball, which is not speed restricted, instead of Honiton, which is. On the return, the train will be diesel-hauled from Exeter St. Davids to Yeovil Junction, where *Bittern* will be waiting to return it back to Waterloo.

There is disappointment all round that this high profile tour, which has been in the diary for a long time, should be affected at such a late stage but *Railway Herald* understands that Network Rail has done its utmost to bring about the revised arrangements to ensure that the tour runs.

Other good news is that the bridge problem near Sherborne, which was the cause of earlier gauging problems, has now been resolved by Network Rail, as will the current problems in the course of time.

# NELPG 'K1' climbs the grade from Boulby

**The North Eastern Locomotive Preservation Group's charter of 10th May brought with it, what is thought to be yet another preservation first. The first operation of a steam locomotive, smokebox first from Boulby Mine, since steam days.**

▲ *NELPG's LNER 'K1' 2-6-0 No. 62005 plays its own part in the pollution free, green environment as it passes the Cleveland Way at Hunt Cliff around the top of the 1-in-49 climb from Crag Hall on the Boulby to Saltburn Freight only line.*

◀ *WCRCs recently reinstated Class 47/7 No. 47760 approaches Belasis Lane signal box, Billingham, on the freight only line from Billingham Junction to Seal Sands, via Haverton, Hill with 'K1' 62005 at the rear.*
**Both: Dave Maloney**

# Answer the challenge

jobs-in-rail.co.uk
your railway career

▲ *Class 55 No. Deltic No. 55022* **Royal Scots Grey** *approaches its Alloa destination on 15th May with the 14.30 line re-opening special from Stirling.*

▼ *LNER Class K4 Mogul No. 61994* **The Great Marquess** *passes near Tullibody on the Alloa Branch on 15th May, hauling the 15.30 line re-opening special from Alloa to Stirling.* **Both: Ken Brunt**

# Fastline Operations

**Fastline Freight's existing intermodal operations from Doncaster, Birch Coppice and Trafford Park to Thamesport, using Class 56 traction, has now been supplemented by coal workings in the Midlands.**

With the company's own fleet of Class 66 locomotives having been delayed, Fastline has hired a First GBRf Class 66/7 to operate the service. This follows the recent driver training activities with a Class 66 from the DRS fleet.

▲ ***First GBRf/Metronet Class 66/7 No. 66719 Metro-Land approaches Portway, near Tamworth, with Fastline Freight's inaugural Ratcliffe Power Station - Daw Mill colliery service on 12th May.***
**Gary S. Smith**

▶ ***Fastline Freight Class 56/3 No. 56303 is pictured in the cutting at Piccadilly on the Birch Coppice branch with an intermodal working to the Isle of Grain.***
**David Pagett**

▲ *Images of Class 08 and 09 locomotives in action, usually with local trip workings on the mainline are few and far between. Here grey-liveried Class 09/1 No. 09101 approaches Marsh Mills on 13th May with a loaded steel scrap working from Cattewater.*

▼ *Later the same day and Class 09/1 No. 09101 finds employment with china clay wagons on what is expected to be the final movement of mainline wagons into Marsh Mills. The shunter is pictured within the complex.* **Both: Stacey Thew**

▲ *The latest movement from Eastleigh to Brighton Lovers Walk occurred on 13th May. Here Wessex Electric Class 442 No. (44)2413 passes Worting Junction, in the company of First GBRf Class 73/2s Nos. 73205* Jeanette *and 73209* Alison *(both on the rear of the train).*

▼ *A pair of Wessex Electric EMUs also found use on an Eastleigh - Basingstoke and return warm up run. On 14th May Nos (44)2407 and (44)2401 pass Shawford, near Winchester, bound for Basingstoke.* **Both: David Warwick**

▲ *DRS unusually supplied Class 57/0 No. 57009 to drag a Stoneblower from Eastleigh to Frome, near Westbury on 13th May. Running from Eastleigh to Clapham Junction, via Basingstoke, then onwards through Reading and along the Berks & Hants route to Frome, the consist passes Great Cheverill on the Berks & Hants main line.* **Tom Curtis**

▼ *DRS Class 66/4 No. 66423 is presently on hire to Freightliner Intermodal. On 13th May, the locomotive powers a Southampton to Birmingham Lawley Street Intermodal service through Worting Junction.* **David Warwick**

## Rail Minister re-dedicates *Oliver Cromwell*

**The National Railway Museum's BR 'Britannia' No. 70013 *Oilver Cromwell* was officially re-dedicated in a ceremony at the Great Central Railway on 10th May.**

The ceremony was undertaken by the Parliamentary Under Secretary of State for Transport, Tom Harris MP. The minister joined other invited VIPs to formally return the locomotive to passenger service.

Mr Harris unveiled the nameplates of the engine in the company of National Railway Museum staff, clearly delighted to see an important engine back in working order.

*Oliver Cromwell* is famous for its place in railway history. In 1968 it heralded the end of an era, hauling Britain's last steam train, the '15 guinea special'. Since then it has been on display at a museum in Norfolk. In a partnership deal it has been overhauled in time to work a main line charter in August, commemorating the last steam train, four decades on.

▲ ***Following the re-dedication ceremony, BR Standard 7P No. 70013* Oliver Cromwell *works a Loughborough Central to Leicester North service through Woodthorpe on 10th May.***

◀ ***The Parliamentary Under Secretary of State for Transport, Tom Harris MP, is pictured alongside the re-dedicated No. 70013* Oliver Cromwell *on 10th May.*** **Both: John Wright**

## Appeal launched for Patriot frames

**The LMS-Patriot Project, the Company behind the Patriot 4-6-0 new-build project, has announced an appeal for £48,000 to build the frames for what will be No. 45551 *The Unknown Warrior*.**

The frames will be the first major component that are ordered for the locomotive and will be assembled at the Llangollen Railway works by the team led by Dave Owen, CME of the Llangollen Railway Engineering Department.

The LMS-Patriot Company is appealing for single donations or regular monthly contributions to the project. A Limited Company has been formed and the Project now has charitable status. A form can be downloaded from the LMS-Patriot Project website by visiting http://www.lms-patriot.org.uk or clicking here.

If the Gift Aid section of the form is filled in, all donations from UK taxpayers will qualify for Gift Aid and extra funds will be raised for the project.

David Bradshaw, Project Leader said: "This is the first LMS new-build project and one that deserves the support of true LMS enthusiasts around the country. There is no doubt in my mind that this is the one that everybody wants to see and I urge all LMS supporters to support the Project so we can make it happen".

The Project was officially launched at the Llangollen Railway on 19th April during the very successful LMS-themed 'Patriot Gala'.

## Signal work at Rothley & Swithland

**Great Central Railway trains arriving at Rothley station are now met by a new lattice signal post, complete with semaphore arm which is 40ft high, another addition to the line's award winning signal scene, installed as part of the annual Signal and Telegraph work week.**

Three point machines have also been installed, another signal post erected, and concrete troughs to carry cabling laid out, as part of the nine day push towards commissioning the signal box at Swithland.

When the box opens it will bring the total on the line to four, creating another block section adding yet another dimension to GCR gala events. The signals at Swithland will be lower quadrant, recreating the look of the Great Central and Great Western joint line.

With an eye to the future, a start has now been made on renovating the signal post that will control access onto the 'Mountsorrel branch'. A section of the branch is being relayed in a separate project by Railway Vehicle Preservation Ltd, a resident Great Central group.

### Stars of the '60s event

Over 17th/18th May, a special event will be held, featuring No. 70013 *Oliver Cromwell*, No. 30777 *Sir Lamiel*, No. 78019, Class 25 No. D5815, Class 47 No. D1705 and Class 45 No. D123. This replaces the previously advertised Eastern Region event.

▲ *One of the star's of the Swanage Railway Diesel Gala event over 10th/11th May, was the Severn Valley Railway-based Class 37/9 No. 37906. The Railfreight grey-liveried Class 37 departs from Corfe Castle heading for Norden with Class 33 No. D6515 on the rear, seen from East Hill.*

▼ *Harmans Cross was the site of the Swanage Beer Festival with regular trains diagrammed from Norden and Swanage to allow people to use public transport to get to the event. First GBRf Class 66/7 No. 66724* **Drax Power Station** *is recorded on its only working of the weekend with the 13.50 Norden - Swanage service hauling South West Trains 4VEP No. 3417* **Gordon Pettit,** *departing from Harmans Cross.* **Both: Brian Garrett**

▲ *Class 50 No. D444* **Exeter** *from the Severn Valley Railway arrives into Harmans Cross on 10th May with the 14.50 shuttle from Norden, working in 'top and tail' mode with celebrity large-logo liveried Class 47/4 No. 47635* **The Lass O' Ballochmyle.** **Brian Garrett**

▼ *BR-blue liveried Class 07 No. 07007 made its first visit away from Eastleigh Works since 1972, being used on the brake van shuttles with Class 08 No. 08436, although it did manage one run through to Harmans Cross late on Saturday evening. The Class 07 may appear at next year's gala following a full overhaul at Eastleigh.* **Neil Walking**

# NYMR Diesel Gala Weekend 2008

**The North Yorkshire Moors Railway held its annual Diesel Gala weekend over 9th-11th May, featuring visiting attractions and yet another first!**

The event found the home fleet of Class 25 No. D7628 *Sybilla*, Class 50 No. 50027 *Lion*, Class 101 three-car DMU No. 101680 and the NRM's long-term resident Class 37 No. D6700 all in traffic, alongside the two visiting DPS 'Deltics' Nos. D9009 *Alycidon* and 55019 *Royal Highland Fusilier*, Class 46 No. D182 from the Midland Railway-Butterley and Class 52 'Western' No. D1015 *Western Champion* from the Diesel Traction Group.

The latter locomotive was used on Esk Valley Line services between Whitby and Battersby on 11th May, as part of the NYMR's two-train service, becoming the first Western to visit Whitby! The other set should have been worked by Class 55 No. 55019, but technical issues, resulted in the NYMR's Class 25 No. D7628 taking over the duties for the day.

Two video clips of Nos. D1015 and D7628 climbing out of Whitby are available from our Video Library section. Watch them now by **clicking here**.

▲ ***Class 52 'Western' No. D1015* Western Champion *crosses the River Esk at Ruswarp with the 10.00 Grosmont-Whitby service on 11th May.***
▶ ***Class 55 'Deltic' No. D9009* Alycidon *approaches Goathland on 11th May with the 12.30 Pickering - Grosmont service.*** **Both: John Whitehouse**

▲ *Resident Class 50 No. 50027* **Lion** *climbs through Green End on 11th May with the 10.00 Grosmont - Pickering service.* **Rowan Jackson**

▶ *Visiting Class 46 No. D182 looks superb in its BR green colour scheme as it prepares to depart from Goathland on 11th May with the 13.00 Grosmont - Goathland 'Moorlander' dining service.* **John Whitehouse**

▼ *Attractions weren't just the passenger services however, as on 9th May the NYMR's superbly restored demonstration freight train was used along the full length of the line behind a variety of motive power. Here, the visiting Deltic Preservation Society locomotive No. D9009* **Alycidon** *drifts down hill near Green End with the 12.00 Pickering - Grosmont local freight.* **Ian Britton**

# Diary

**The editor welcomes details of forthcoming events, talks, slide shows, conferences, model railway exhibitions and club meetings for inclusion within this section.**

Details should be sent via email to ***editor@railwayherald.co.uk*** and should include a brief outline of the event, including the speakers name if appropriate, date, time and location, together with contact details (either telephone, web or email). *Railway Herald* cannot accept any responsibility for any inaccuracies or events which are amended, cancelled or postponed. Information, such as advance programmes and club meeting line-ups can also be sent through the post to the editorial address.

**17th May 2008**
**Friends of the West Highland Lines AGM**.
Regent Hotel, Esplanade, Oban. Meeting commences at 12.00. Visitors are welcome but are reminded that they may act as observers and are not permitted to take part in the business of the meeting.

**17th-18th May 2008**
**Dumfries Model Railway Exhibition**
Ice Bowl, King Street, Dumfries, DG2 9AN. Opening hours 10.00-17.00 both days. Further details from the official website, click here. Approximately 20 layouts, comprehensive trade support, free parking and programme. Easy to find: just follow temporary yellow signs from the A75/A76 roundabout, or "Brown" tourist signs for Ice Bowl. Admission Adults: £3.50, Child/Seniors £2.50, Family (2+2) £9.50

**19th May 2008**
**Great Central Railway Society (Spinkhill Branch)**
The Angel Hotel, College Road, Spinkhill 'Post-War Modernisation of the Sheffield Railway Scene' by Nick Wheat. Meeting commences at 19.30. Contact 01909 473927 for details.

**20th May 2007**
**Permanent Way Institution (West Yorkshire Branch)**
The Pullman Room, The Goldern Lion Hotel, 2 Lower Briggate, Leeds. Energy Efficiency, Recyling and the reuse of resources on the railway by Martin Woofe. Meeting commences at 18.30. Contact Martin Woofe on 07747 160949 for further details and information.

**21st May 2008**
**Permanent Way Institution (Bristol & West of England)**
Arup Auditorium, 63 St. Thomas Street, Bristol.
Chairman's address followed by four short papers. Contact Alex Simpson on 01242 519828 for further details. Doors open 17.30 for an 18.00 start.

**Permanent Way Institution (Glasgow Branch)**
Upstairs Lounge, The Iron Horse, West Nile Street, Glasgow. Sheilds Junction Renewal. Joint Meeting with Railway Civil Engineers Association. Contact Jack Scott on 0141 952 2562 for further details. Meeting commences 17.30

**22nd May 2008**
**Mid-Hants Railway Preservation Society (Thames Valley Group)**
Church House, Church Street, Caversham, Reading.
'End of BR Steam in the North West, Past and Present'. Meeting starts 19.30. Donation requested

**Permanent Way Institution (Nottingham & Derby Branch)**
The Midland Hotel, adjacent to Derby station.
Steam worked railways - A photographic tour by John Birkenshaw PWMM. Contact Colin Cowey on 01949 837067 for further details. Meeting commences at 18.30

**RCTS (Sussex Branch)**
Brighthelm Church & Community Centre, North Road, Brighton. "50 Years of Taffys Travels - Part 1 Western & Southern" by Peter Jones. Meeting starts 7.30pm. Donation of £1.50 is requested

**4th June 2008**
**Burton Railway Society**
Marston's Social Club, Shobnall Road, Burton-upon-Trent.
'The popular annual railway quiz' by Dave Hook. Contact Mark Ratcliffe on 01283 221537 for further details for further details. Meeting commences at 19.30

**Permanent Way Institution (Thames Valley section)**
Sussex House, Reading.
Reading Remodelling. Contact Rodney Pinchen by email at rodneyp@tinyworld.co.uk for details. Meeting starts at 17.30

**5th June 2008**
**Great Central Railway Society (Rotherham Branch)**
The Three Horseshoes, Bawtry Road, Wickersley. 'Nottingham Victoria station' by Ken Grainger. Commences 19.30.

**9th June 2008**
**Lincoln Railway Society**
St Hugh's Church Hall, North Hykeham, Lincoln 'Members slide show' Meeting starts 20.00. Contact 01522 705365 for details.

**Permanent Way Institution (London Branch)**
10th Floor Restaurant, 55 Broadway, London St. James Park tube. Modular S&C by Geoff South, Network Rail Contact Paul Gammage (pjgammage@aol.com) for details. Meeting commences at 17.30

**10th June 2008**
**Abergavenny & District Steam Society**
Upper Room' at 'The Hen and Chickens', Flannel Street, Abergavenny. 'West and North Devon' by Peter Gray. Meeting commences at 20.00.

**The 8E Railway Association (Northwich Branch)**
The Gladstone Club, Station Road, Northwich. Evening visit to Chester by rail. Contact 01606 44959 for further details.

**11th June 2008**
**Grimsby & Cleethorpes Railway Group**
RAF Association Club, Alexandra Road, Cleethorpes
'The Stanier Jubilees of the LMS' by Mick Hayes. Meeting commences at 19.30. Contact 01724 341358 for further details.

**Swiss Railways Society (London Branch)**
The Model Railway Club, Keen House, 4 Calshot Street, London N1 9AT (near Kings Cross station) Show title to be confirmed, presented by George Howe. Meetings starts 19.00. £2 donation. Contact 0208 660 3532 details.

**12th June 2008**
**Permanent Way Institution (Birmingham Section)**
The 11th Floor Boardroom, Network Rail Offices, The Mailbox, 100 Wharfside Street, Birmingham. Merseyrail Track Slabs by N. Reynolds. Contact Ian Wardle on 0121 345 3931 for details. Doors open 17.45. Meeting starts 18.15.

**16th June 2008**
**Great Central Railway Society (Spinkhill Branch)**
The Angel Hotel, College Road, Spinkhill 'Grimsby & Cleethorpes - created by the GCR' by Bryan Longbone. Meeting commences 19.30. Contact 01909 473927.

**19th June 2007**
**Barrow Hill Engine Shed Society, Barrow Hill Roundhouse.**
'Colour Rail - 30 Years of Service' by David Aldis. Ron White is unable to present the show personally but has given permission for the show from the presenter's personal collection. Something for everyone, from pre nationalisation to B.R. steam and diesel. Doors open 7.00pm. Show commences 7.30pm. Admission £1.50 members, £2.00 non members.

**20th June 2008**
**Great Western Society (Taunton Group)**
Stoke St. Mary Village Hall, near Taunton. 'Sixty years of Railway Photography' by Philip Kelley. Starts 19.30, Contact Peter Triggs on 01823 334188.

**Mid-Hants Railway Preservation Society (Thames Valley Group)**
Church House, Church Street, Caversham, Reading.
Members photographic and video evening. Meeting commences at 19.30 for 19.45. A donation is requested

**2nd July 2008**
**Burton Railway Society**
Marston's Social Club, Shobnall Road, Burton-upon-Trent.
'Is the Master Cutler a South Yorkshireman?' by Martin Bromley. Contact Mark Ratcliffe on 01283 221537 for further details for further details. Meeting commences at 19.30

**8th July 2008**
**Abergavenny & District Steam Society**
Upper Room' at 'The Hen and Chickens', Flannel Street, Abergavenny. 'The County Project' by Terry McCarthy. Starts 20.00.

**9th July 2008**
**Swiss Railways Society (London Branch)**
The Model Railway Club, Keen House, 4 Calshot Street, London N1 9AT (near Kings Cross station) To be confirmed. Meetings commence at 19.00, Refreshments available. A £2 donation is requested. Contact Ron Dawes (0208 660 3532) for further details.

**10th July 2008**
**Permanent Way Institution (Birmingham Section)**
The 11th Floor Boardroom, Network Rail Offices, The Mailbox, 100 Wharfside Street, Birmingham. Afternoon visit to the Severn Valley Railway, followed by an evening presentation. Contact Ian Wardle on 0121 345 3931 for further details. Doors open 17.45 for an 18.15 start.

**14th July 2008**
**Lincoln Railway Society**
St Hugh's Church Hall, North Hykeham, Lincoln
'Annual Quiz Night'. Meeting commences at 20.00. Contact 01522 705365 for further details.

**18th July 2008**
**Great Western Society (Taunton Group)**
Stoke St. Mary Village Hall, near Taunton.
'Memories of Steam' by David Butcher. Meeting commences at 19.30, Contact Peter Triggs on 01823 334188 for further details.

**6th August 2008**
**Burton Railway Society**
Marston's Social Club, Shobnall Road, Burton-upon-Trent.
'Steaming through Britain' by Graham Briggs. Contact Mark Ratcliffe on 01283 221537 for further details for further details. Meeting commences at 19.30

**11th August 2008**
**Lincoln Railway Society**
St Hugh's Church Hall, North Hykeham, Lincoln
'Canklow to Cape Town' by Mike Eggenton. Meeting commences at 20.00. Contact 01522 705365 for further details.

**12th August 2008**
**Abergavenny & District Steam Society**
Upper Room' at 'The Hen and Chickens', Flannel Street, Abergavenny. LNER and SR varieties by Colin Jacks. Starts 20.00.

**13th August 2008**
**Swiss Railways Society (London Branch)**
The Model Railway Club, Keen House, 4 Calshot Street, London N1 9AT (near Kings Cross station)
'A-Z of Switzerland' - Members Slides. Meeting commence at 19.00, Refreshments available. A £2 donation is requested from attendees. Contact Ron Dawes (0208 660 3532) for further details.

**15th August 2008**
**Great Western Society (Taunton Group)**
Stoke St. Mary Village Hall, near Taunton. 'Britannias & Broads' by Max Wilkinson. Meeting commences 19.30, Contact 01823 334188 for details

**2nd September 2008**
**Southern Electric Group (South Hampshire Branch)**
Eastleigh Railway Institute in Romsey Road, Eastleigh.
'London and its environs' by Bruce Oliver. Meeting commences 19.30. Entrance fee £2

**3rd September 2008**
**Burton Railway Society**
Marston's Social Club, Shobnall Road, Burton-upon-Trent.
'The Southern in the South & West' by Peter Gray.
Contact Mark Ratcliffe on 01283 221537 for further details.
Meeting commences at 19.30

**8th September 2008**
**Lincoln Railway Society**
St Hugh's Church Hall, North Hykeham, Lincoln
'NYK' by David Cross. Meeting commences 20.00. Contact 01522 705365 for further details.

**9th September 2008**
**Abergavenny & District Steam Society**
Upper Room' at 'The Hen and Chickens', Flannel Street, Abergavenny. 'An evening with Malcolm Ranieri'. Meeting commences 20.00.

**10th September 2008**
**Swiss Railways Society (London Branch)**
The Model Railway Club, Keen House, 4 Calshot Street, London N1 9AT (near Kings Cross station)
'Bernese Oberland Revisited' by Paul Russenberger. Meetings commence at 19.00, Refreshments available. A £2 donation is requested. Contact Ron Dawes (0208 660 3532) for further details.

**19th September 2008**
**Great Western Society (Taunton Group)**
Stoke St. Mary Village Hall, near Taunton.
'Steam in the 1960s' by Alan Reeve. Starts 19.30, Contact Peter Triggs on 01823 334188.

**25th September 2008**
**Mid-Hants Railway Preservation Society (Thames Valley Group)**
Church House, Church Street, Caversham, Reading.
'Zimbabewe Railways' by Simon Bowden. Meeting commences at 19.30 for 19.45. A donation is requested

**1st October 2008**
**Burton Railway Society**
Marston's Social Club, Shobnall Road, Burton-upon-Trent.
'20 years of mainline steam', a large format slide show by Malcolm Ranieri. Contact Mark Ratcliffe on 01283 221537 for further details. Meeting commences at 19.30

**7th October 2008**
**Southern Electric Group (South Hampshire Branch)**
Eastleigh Railway Institute in Romsey Road, Eastleigh.
'The tramways of Bournemouth and Poole' by Richard Pennell. Starts 19.30. Entrance fee £2

**8th October 2008**
**Swiss Railways Society (London Branch)**
The Model Railway Club, Keen House, 4 Calshot Street, London N1 9AT (near Kings Cross station)
Show title to be confirmed. Presented by Martin Fisher. Meetings commence at 19.00, Refreshments available. A £2 donation is requested. Contact Ron Dawes (0208 660 3532) for further details.

**13th October 2008**
**Lincoln Railway Society**
St Hugh's Church Hall, North Hykeham, Lincoln 'Steaming around in 2006/2007' by Alex Hurd. Meeting starts 8pm. Contact 01522 705365 for further details.

**14th October 2008**
**Abergavenny & District Steam Society**
Upper Room' at 'The Hen and Chickens', Flannel Street, Abergavenny. 'Men of the Mechanicals' (Lickey Incline Memories) by Neville Billington. Starts 20.00.

**17th October 2008**
**Great Western Society (Taunton Group)**
Stoke St. Mary Village Hall, near Taunton. 'India by Rail - a Family Evening' by Peter Tickner. Starts 19.30, Contact Peter Triggs on 01823 334188.

**23rd October 2008**
**Mid-Hants Railway Preservation Society (Thames Valley Group)**
Church House, Church Street, Caversham, Reading.
'Mid-Hants Railway signalling' by Mike Ball. Meeting commences at 19.30 for 19.45.

**5th November 2008**
**Burton Railway Society**
Marston's Social Club, Shobnall Road, Burton-upon-Trent.
'Railways in the Peak District' by Les Nixon. Contact Mark Ratcliffe on 01283 221537 for details.
Meeting commences at 19.30

**7th November 2008**
**Great Western Society (Taunton Group)**
Rockwell Green School, Brooklands Road, Rockwell Green, Wellington. Somerset. TA21 9DJ.
'Trains in the Countryside' by Peter Triggs. Starts 19.30, Contact 01823 334188 for detals.

**Internet Links**
Further contact details for the clubs and societies list in this column can be obtained from our new-look website by clicking here.

**Should your club or society event be listed here? If so then please email the editor with the appropriate details.**

▼ *Advenza Freight Class 57/0 No. 57005 powers a Stockton to Cardiff Tidal service southbound through Abbotswood Junction on 26th May 2008.* **Stephen Tucker**

THE CATHEDRALS EXPRESS
60019